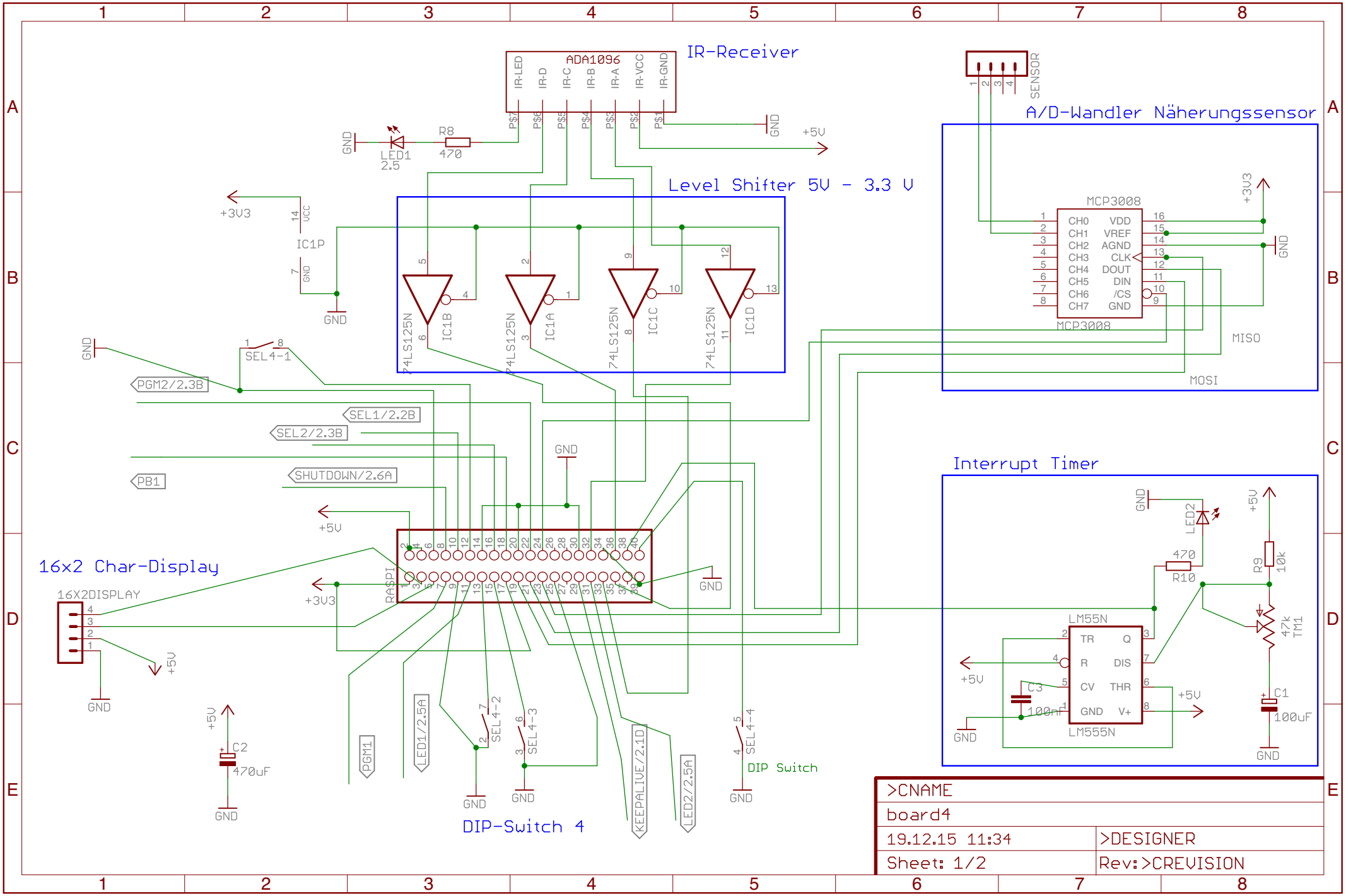

19.12.15 11:35 /Users/peter/Documents/eagle/Triangle-4/board4.sch (Sheet: 1/2)

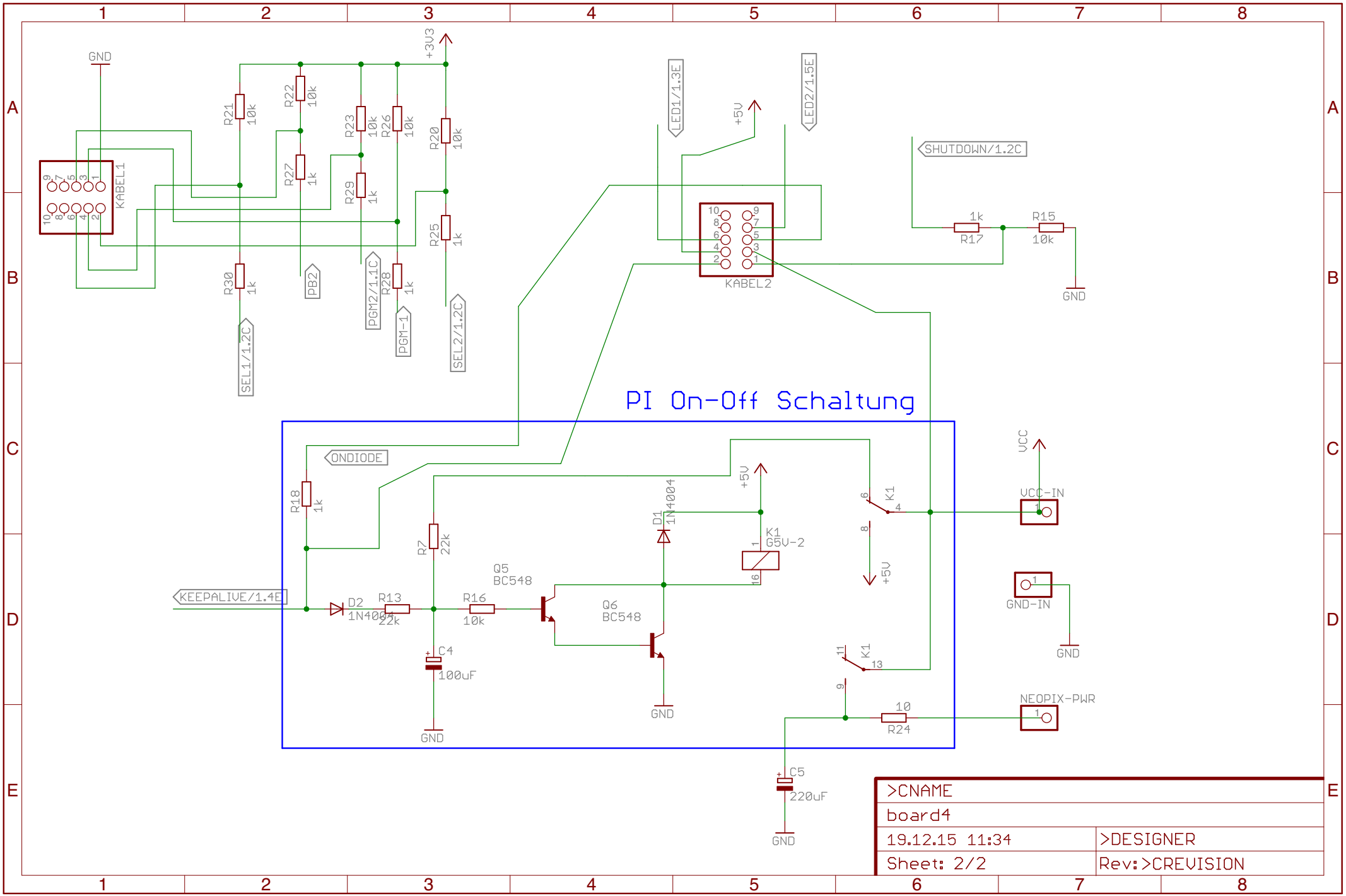

19.12.15 11:35 /Users/peter/Documents/eagle/Triangle-4/board4.sch (Sheet: 2/2)